GOSSEN METRAWATT

LINAX 4000L
Continuous-line recorder

3-348-852-03
6/8.18

- 1 to 4 line channels
- Format 144 mm x 144 mm,
  mounting depth 250 mm
- Combined recording table
  for roll chart (32 m) or fanfold chart (16 m)
- Measuring channels electrically isolated
- Rugged design

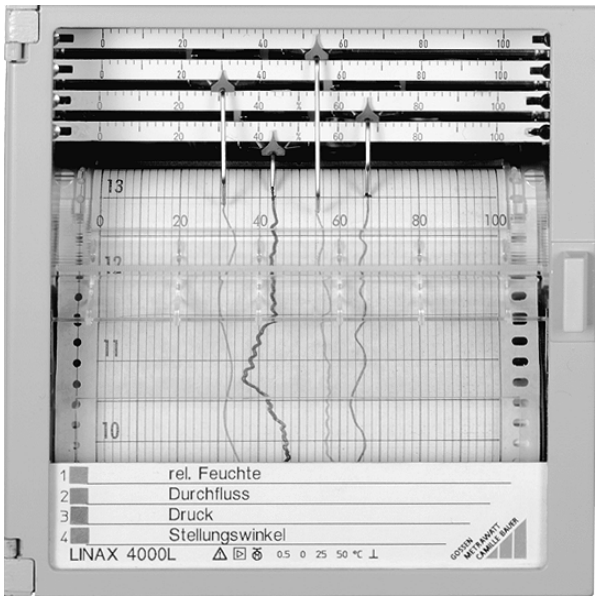

Applications

The configurable continuous-line recorder LINAX 4000L serves to record slowly changing measured quantities. DC current and DC voltage can be connected directly.
The recorder is meant for installation in panels.

Description

The LINAX 4000L is a microprocessor-controlled, continuous-line recorder. It is supplied with 1 to 4 line channels.

The recorder is connected to transducers and is served to measure process-related signals.

The recorder is supplied with signal inputs DC 0 ... 20 mA / 0 ... 10 V or DC 4 ... 20 mA.

High electromagnetic compatibility (EMC) as well as high common mode and series mode rejection of interference voltages ensure non-problem use of the LINAX 4000L even in rough environments.

Applied rules and standards

A) International standards

IEC 484	Potentiometric recorders
IEC 61010-1	Safety requirements for electrical equipment for measurement, control and laboratory use Part 1: General requirements
IEC 664	Measuring category, degree of pollution
IEC 68-2-6	Mechanical stress (vibrations)
IEC 68-2-27	Mechanical stress (shock)
EN 60529	Test instruments and test procedures Degrees of protection provided by enclosures (IP code)
EN 61326-1	Electrical equipment for measurement, control and laboratory use – EMC requirements – Part 1: General requirements
IEC 721-3-3	Climatic environmental conditions
IEC 742	Isolating transformers and safety isolating transformers – requirements

B) German standards

DIN 43802	Scales
DIN 16234	Recording paper
DIN 43831	Cases

Symbols and their meaning

Symbol	Meaning
X1n	Lower range limit nom. range
X2n	Upper range limit nom. range
X2n – X1n	Range span nom. range

LINAX 4000L
Continuous-line recorder

Technical data

Analog inputs and measuring ranges

DC current	0 ... 20 mA; Ri = 40 Ω 4 ... 20 mA; Ri = 50 Ω
DC voltage	0 ...10 mA; Ri = 500 kΩ

Deadband 0.25 % of range span
Setting time 2 s, 5 s, 20 s, 60 s

Reference conditions

Ambient temperature	25 °C ± 1 K
Relative humidity	45 ... 75 %
Auxiliary voltage	Hn ± 2 %, nominal frequency ± 2 %
Mounting position	Front upright ± 2°
Warm-up time	30 min

Accuracy

Deviation according to IEC 484	Class 0.5 referred to range span

Variations

Temperature	0.2 %/10 K, additionally
Humidity	Note influence on recording paper according to DIN 16234
Auxiliary voltage Hn	0.1 % at 24 V AC/DC ± 20 % 0.1 % at 24 V AC +10 % / –15 % 0.1 % at 115 V AC +10 % / –15 % 0.1 % at 230 V AC +10 % / –15 %
AC interference voltages (see perm. interference voltages)	0.5 % of range span
Magnetic field of external origin 0.5 mT	0.5 % of range span
Mechanical stress according to DIN IEC 68-2-6/27 Transport Impact: 30 g/18 ms Vibration: 2 g/ 5 ... 150 Hz in function Vibration: 0.5 g/± 0.04 mm/ 5...150 Hz/3 × 2 cicli	During and after the effect ± 0.5 % of range span

Display

Scale
One graduation per measuring system
Scale face 5 mm wide
Character size 2 mm

Recording

Arrangement of measuring systems and color correlation

	1	2	3	4	No. of line channels
green			×	×	3rd channel
red		×	×	×	2nd channel
blue	×	×	×	×	1st channel
violet				×	4nd channel

Line recording
Fiber recording pen with inkwell of approximately 1.4 ml,
line length approximately 1300 m,
distance between the tips of the fiber recording pens 2 mm.

Recording

Chart speed	Speed selectable on control panel: 1/5/10/20/60/120/300/600 mm/h
Recording chart	32 m roll chart or 16 m fanfold chart
Visible chart length	60 mm
Recording width	100 mm (chart width 120 mm, DIN 16230)
Chart intake (with roll chart)	Via automatic paper take-up device (daily tear-off or take-up of the 32 m possible)

Auxiliary voltage

24 V AC/DC ± 20 %
Power consumption with max. fitting approx. 15 W/20 VA

24/110/230 V AC +10 %/–15 %
Frequency range 47.5 ... 63 Hz
Power consumption with max. fitting approx. 20 W/25 VA

Climatic suitability

Ambient temperature	0 ... 25 ... 50 °C
Transport and storage temperature	–40 ... +70 °C
Relative humidity	≤ 75 % annual average; max. RH ≤ 85 % in function
Climatic class	3K3 acc. to IEC 721-3-3

Electrical safety

Test according to DIN EN 61010-1 (classification VDE 0411)
and/or IEC 61010-1

Protection class I

Overvoltage category
III at the power input
II at inputs

Degree of pollution
2 in the device and at the connection terminals
according to VDE 0110, parts 1 and 2

Test voltage
3.75 kV measuring channels to energy supply
2.20 kV protective conductor to energy supply

Functional extra low voltage with protective separation (PELV)

Between power input – measuring channels, control leads, interface cables acc. to VDE 0100 part 410 and VDE 0106 part 101.

Electromagnetic compatibility

The protection goals of the EMC directive 2014/30/EU as to radio interference suppression and as to immunity to interference according to EN 61326-1 are complied with.

Scope of delivery

1 copy of operating instructions
2 fasteners
1 chart roll or fanfold pack, inserted in the unit
1 fiber recording pen per measuring channel

Additionally, depending upon the order:
Centering angle bracket for installation in mechanical grids; reading ruler(s)

LINAX 4000L
Continuous-line recorder

Connection, case and installation

Electrical connections
Protection type IP 20
Screw and plug terminals for signal inputs
Max. wire cross section 2 x 1 mm^2
Screw terminals for line connection
Max. wire cross section 4 mm^2

Case
Molded material for installation in panels or mechanical grids (see dimensional drawing for dimensions)

Protection type of case according to EN 60529
Front panel IP 54
Rear panel IP 20

Color of case
Silica-gray according to RAL 7032

Door of case
Molded material or door with metal frame RAL 7032 and glas pane, anti-glare

Fastening of case
With 2 fasteners (optionally for installation in panel or mechanical grid), centering angle brackets are required for installation in mechanical grids

Position of use
Lateral [–30° ... 0 ... +30°], inclined to the rear 20°, to the front 20°

Mounting distance
Horizontal or vertical 0 mm, it must be possible to open the door of the case through 100°

Weight 3 kg, approx.

Dimensional drawing (dimensions in mm)

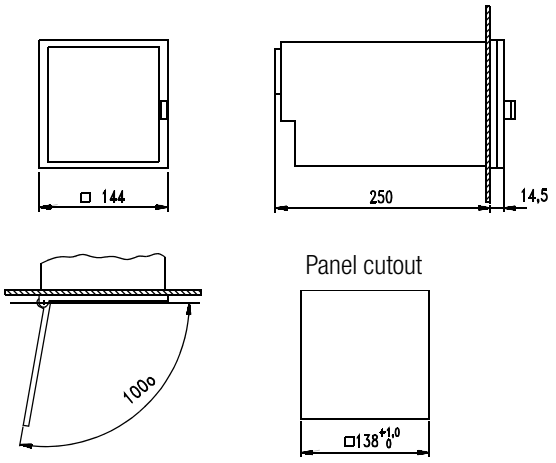

Wirung diagrams

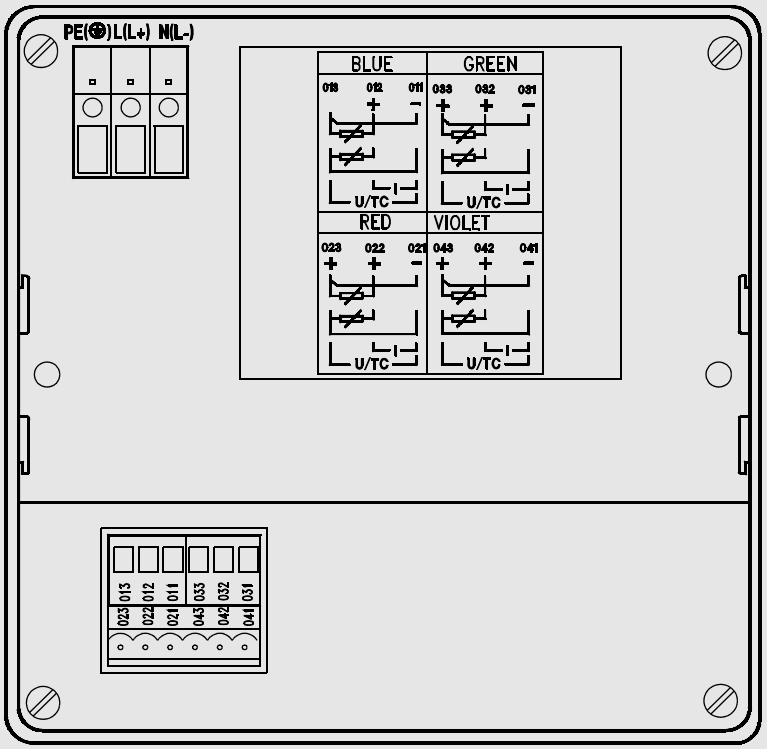

Signal inputs

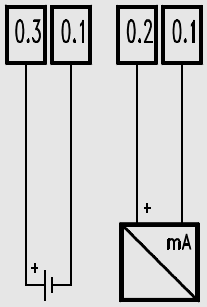

Order code

Descrizione			Article number
Continuous-line recorder LINAX 4000L with identical DC measuring ranges for all channels			**A4150**
Front dimensions 144 × 144mm			
	1 line channel		AA001
	2 line channels		AA002
	3 line channels		AA003
	4 line channels		AA004
Measuring ranges	**Lower range limit X1**	**Upper range limit X2**	
DC 0 ... 20 mA / DC 0 ... 10 V (convertible to DC 4 ... 20 mA)	X1 = 0 mA	X2 = 20 mA	BA001
DC 4 ... 20 mA (convertible to DC 0 ... 20 mA / DC 0 ... 10 V)	X1 = 4 mA	X2 = 20 mA	BA002
Scale 1st channel:	same as measuring range		BB001
	without graduation		BB002
	0 ... 100		BB003
	as per request		BB900
Reading ruler 1st channel:	without reading ruler		BC000
	same as scale		BC001
	0 ... 100		BC002
	as per request		BC900
Scale 2nd channel, only for 2-channel or multi-channel versions:			
same as scale 1st channel, but features CB...			CBxxx
Reading ruler 2nd channel, only for 2-channel or multi-channel versions:			
same as 1st channel, but features CC...			CCxxx
Scale 3rd channel, only for 3-channel or 4-channel version:			
same as scale 1st channel, but features DB...			DBxxx
Reading ruler 3rd channel, only for 3-channel or 4-channel version:			
same as 1st channel, but features DC...			DCxxx
Scale 4th channel, only for 4-channel version:			
same as scale 1st channel, but features EB...			EBxxx
Reading ruler 4th channel, only for 4-channel version:			
same as 1st channel 1, but features EC...			ECxxx
Recording type	for roll (32 m)		KA001
	for fanfold pack (16 m)		KA002
Auxiliary voltage:	24 V ... 85 V AC/DC		LA001
	95 V ... 240 V AC/DC		LA002

(Cont'd next page)

LINAX 4000L
Continuous-line recorder

Order code (cont.)

Descrizione		Article number
		A4150
Front door	Plastic	MA001
	Metal	MA002
Label	Blank with GOSSEN METRAWATT logo	NA000
	Blank without logo	NA001
	With inscription as per request, 1 line/meas. point with max. 31 characters	NA900
Test report	None	PA000
	With factory test certificate M according to DIN 55350-18-4.2.2 and reading test certificate B according to EN 10204-3.1B	PA001
Operating instructions	German	RA000
	None	RA001
	English	RA002
	French	RA003
	Italian	RA004

Ordering examples

Clear text		Ordering code
Continuous-line recorder LINAX 4000L with identical DC meas. range for all channels		**A4150**
	3 continuous-line recorders	AA003
Meas. range DC 0 ... 20 mA		BA001
Scale 1st channel:	0 100	BB003
Scale 2nd channel:	0 .... 5 MW	CB900
Scale 3rd channel:	0 ... 300 °C	DB900
Recording type	for fanfold pack (16 m)	KA002
Auxiliary voltage	AC: 230 V	LA002
Front door	Plastic	MA001

Ordering code: A4150 / AA003 / BA001 / BB003 / CB900 0 ... 5 MW / DB900 0 ... 300 °C / KA002 / LA002 / MA001

Accessories

Article numbers ending with a letter are complete and need not to be commented.
Article numbers ending with a **numeral** must be commented with the **following features**.

Description			Article number										
Scale with heights 5.0 mm	Scale, graduation as per request			**A4130**									
Reading ruler, graduation as per request					**A4120**								
Label for measuring point													
	for LINAX 4000					**A4400**							
	with GOSSEN METRAWATT logo					AA000							
	without GOSSEN METRAWATT logo					AA001							
	Channel green without inscription					BA001							
	Channel green with inscription					BA900							
	Channel red without inscription					BB001							
	Channel red with inscription					BB900							
	Channel blue without inscription					BC001							
	Channel blue with inscription					BC900							
	Channel violet without inscription					BD001							
	Channel violet with inscription					BD900							
Screw terminal with 5 connectors							**A404A**						
Screw terminal with 3 connectors								**A404B**					
4 each centering angle (with installation in grid)									**A416A**				

Consumable items (cont'd)

Article numbers ending with a letter are complete and need not to be commented.
Article numbers ending with a **numeral** must be commented with the **following features**.

Description			Article number										
Recording chart, chart width 120 mm, recording width 100 mm													
Chart roll 32 m, graduation 0 ... 100, minimum ordering quantity 25 rolls													
	Time graduation/ speed	None	**A401A**										
		10 mm/h	**A401B**										
		20 mm/h	**A401C**										
		60 mm/h	**A401D**										
		120 mm/h	**A401E**										
		as per request	**A4070**										
			CA90										

(cont'd)

LINAX 4000L
Continuous-line recorder

Consumable items (cont'd)

Article numbers ending with a letter are complete and need not to be commented.
Article numbers ending with a **numeral** must be commented with the **following features**.

Description			**Article number**										
Chart roll 32 m, with calibrated graduation, minimum ordering quantity 25 rolls					**A4071**								
	Calibrated graduation	as per request			AA900								
	Inscription	as per request			BA900								
	Time graduation/ speed	as per request			CA900								
Fanfold pack 16 m, graduation 0 ... 100, minimum ordering quantity 25 packs													
	Time graduation/ speed	None				**A401L**							
		20 mm/h				**A401N**							
		as per request				**A4075**							
						CA90							
Fanfold pack 16 m, with calibrated graduation, minimum ordering quantity 25 packs								**A4074**					
	Calibrated graduation	as per request						AA900					
	Inscription	as per request						BA900					
	Time graduation/ speed	as per request						CA900					
Recording styli													
Stylus green									**A406B**				
Stylus red									**A406A**				
Stylus blue									**A406C**				
Stylus violet									**A406D**				

GOSSEN METRAWATT

GMC-I Messtechnik GmbH
Südwestpark 15
90449 Nürnberg • Germany

Phone +49 911 8602-111
Fax +49 911 8602-777
E-Mail info@gossenmetrawatt.com
www.gossenmetrawatt.com